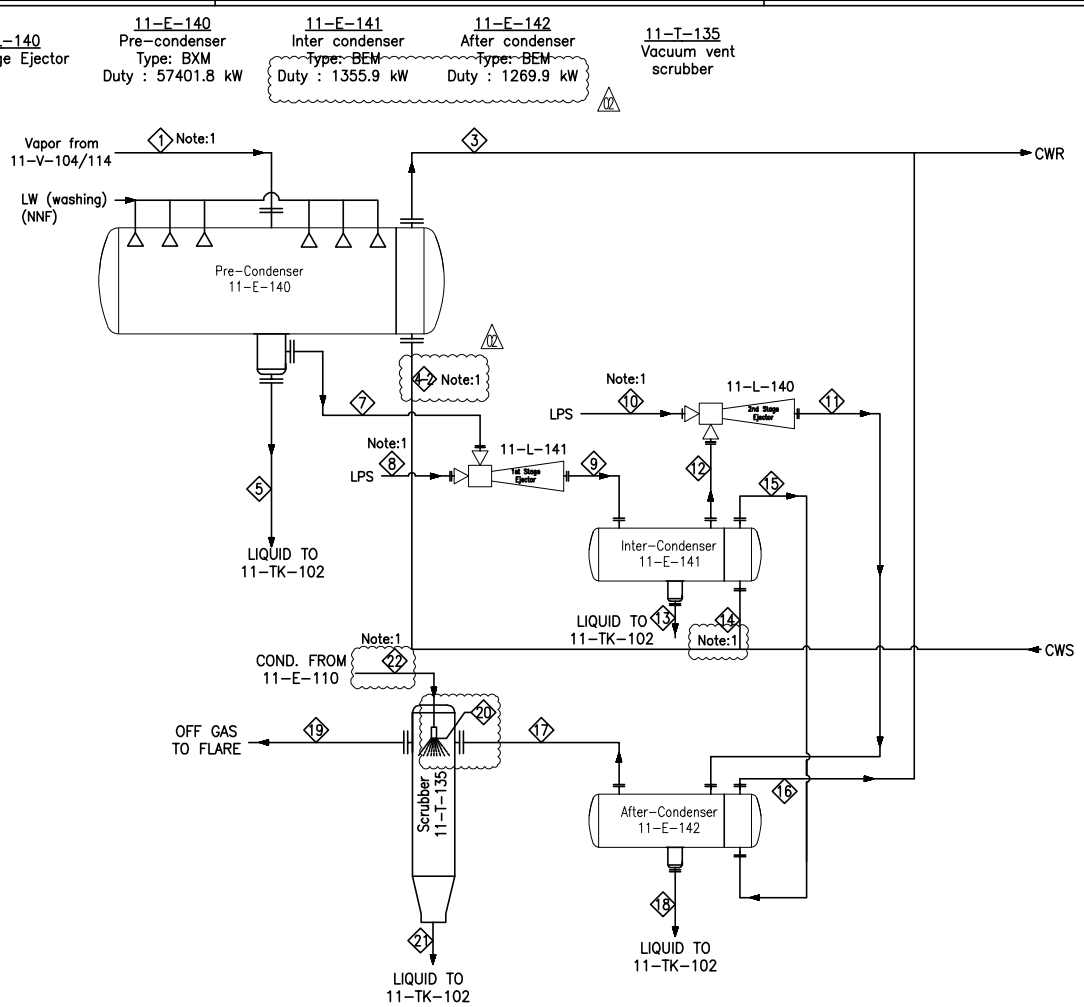

NOTES:

1- Vendor's Guarantee Points
2- 40% over design is considered for 1st stage ejector motive steam
3- 65% over design is considered for 2nd stage ejector motive steam
4- Package overdesigns for equipments are as below:
- Pre-condenser : 9 % on surface , Additional +10% overdesign on process flowrate included as per CLIENT request(1208-00-RE-REQ-325A-00 MR)
- Inter-Condenser : 33% On surface
- After-Condenser : 83% on surface
- 1st stage Ejector : 40% on motive steam
- 2nd stage Ejector : 65% on motive steam
- Scrubber : 0.3 Kg/h compared to max. allowable of 2kg/h NH3 at discharge point (according to 1208-00-RE-REQ-325A-00 MR)

5- Guaranteed NH3 content at final discharging point is 2Kg/h (max.).

Stream Name	Units	1.00	3.00	4-2	5.00	7.00	8.00	12.00	10.00	9.00	13.00	14.00	15.00	16.00	11.00	17.00	18.00	19.00	20.00	21.00	22.00
Phase		Vapor Phase	Liquid Phase	Liquid Phase	Liquid Phase	Vapor Phase	Vapor Phase	Vapor Phase	Vapor Phase	Vapor Phase	Liquid Phase	Liquid Phase	Liquid Phase	Liquid Phase	Vapor Phase	Vapor Phase	Liquid Phase	Vapor Phase	Liquid Phase	Liquid Phase	Liquid Phase
Temperature	C	122.00	48.58	39.00	43.70	43.70	147.14	44.00	147.14	114.05	44.00	39.00	43.67	48.20	132.00	48.90	48.90	50.17	50.00	51.01	50.00
Pressure	bara	0.2500	2.0000	2.5000	0.23857	0.23857	4.4000	0.5720	4.4000	0.5800	0.5720	2.5000	2.1000	1.8400	1.2500	1.2420	1.2420	1.2000	1.2100	1.2100	27.30
Mass Enthalpy	kJ/kg	-12318.16	-15767.31	-15807.25	-14854.64	-5785.94	-13204.64	-2648.27	-13204.64	-11056.55	-14616.64	-15807.25	-15787.45	-15768.76	-11871.36	-954.83	-15159.30	-885.63	-15761.46	-15701.90	-15759.30
Mass Density	kg/cum	0.140	988.762	992.746	963.953	0.171	2.321	0.459	2.321	0.330	921.941	992.746	990.852	988.916	0.686	1.243	949.098	1.245	988.086	977.550	989.17
Average MW	kg/kmol	18.32	18.02	18.02	18.49	19.08	18.02	20.87	18.02	18.27	17.97	18.02	18.02	18.02	18.37	26.70	17.98	27.62	18.02	18.03	18.02
Total Mass Flows	kg/hr	83452.00	5171181.00	5171181.00	82883.04	568.96	1396.00	220.30	1523.83	1964.96	1744.67	220163.00	220163.00	220163.00	1744.13	114.14	1629.99	99.52	3500.00	3514.61	3500.00
CO2	kg/hr	1925.00	0.00	0.00	1.20	5.51	0.00	0.02	0.00	5.51	0.00	0.00	0.00	0.00	0.02	0.00	0.00	0.00	0.00	0.00	0.00
N2	kg/hr	81.43	0.00	0.00	2.86	78.57	0.00	78.15	0.00	78.57	0.42	0.00	0.00	0.00	78.15	76.20	1.95	72.24	0.00	3.96	0.00
NH3	kg/hr	5610.00	0.00	0.00	4319.31	270.26	0.00	91.04	0.00	270.26	175.92	0.00	0.00	0.00	91.04	7.39	83.61	0.296	0.00	7.09	0.00
H2O	kg/hr	75075.00	5171181.00	5171181.00	74383.96	188.75	1396.00	25.65	1523.83	1584.75	1558.08	220163.00	220163.00	220163.00	1549.48	6.86	1542.58	6.70	3500.00	3500.16	3500.00
O2	kg/hr	28.57	0.00	0.00	2.73	25.84	0.00	25.44	0.00	25.84	0.40	0.00	0.00	0.00	25.44	23.69	1.76	20.29	0.00	3.40	0.00
H3O+	kg/hr	0.00	0.00	0.00	0.00	0.00	0.00	0.00	0.00	0.00	0.00	0.00	0.00	0.00	0.00	0.00	0.00	0.00	0.00	0.00	0.00
OH-	kg/hr	0.00	0.00	0.00	0.01	0.00	0.00	0.00	0.00	0.00	0.00	0.00	0.00	0.00	0.00	0.00	0.02	0.00	0.00	0.00	0.00
NH4+	kg/hr	0.00	0.00	0.00	797.46	0.00	0.00	0.00	0.00	0.00	2.27	0.00	0.00	0.00	0.00	0.00	0.04	0.00	0.00	0.00	0.00
NH2COO-	kg/hr	0.00	0.00	0.00	942.95	0.00	0.00	0.00	0.00	0.00	4.09	0.00	0.00	0.00	0.00	0.00	0.01	0.00	0.00	0.00	0.00
HCO3-	kg/hr	0.00	0.00	0.00	1663.31	0.00	0.00	0.00	0.00	0.00	3.39	0.00	0.00	0.00	0.00	0.00	0.01	0.00	0.00	0.00	0.00
CO3--	kg/hr	0.00	0.00	0.00	37.28	0.00	0.00	0.00	0.00	0.00	0.06	0.00	0.00	0.00	0.00	0.00	0.01	0.00	0.00	0.00	0.00
UREA	kg/hr	732.0000	0.0000	0.0000	731.9676	0.0324	0.0000	0.0000	0.0000	0.0324	0.0324	0.0000	0.0000	0.0000	0.0000	0.0000	0.0000	0.0000	0.0000	0.0000	0.0000
Mass Heat Capacity	kJ/kg-K	1.8986	4.1737	4.1719	4.2287	1.8240	1.9571	1.5732	1.9571	1.9013	4.5684	4.1719	4.1726	4.1735	1.8836	1.1391	4.3585	1.0770	4.1743	4.1744	4.1680
Viscosity	cP	0.0136	0.5736	0.6841	0.5717	0.0123	0.0144	0.0145	0.0144	0.0138	0.5168	0.6841	0.6256	0.5771	0.0145	0.0186	0.5163	0.0192	0.5596	0.5449	0.5595
Thermal Conductivity	Watt/m-K	0.0270	0.6359	0.6247	0.5714	0.0245	0.0287	0.0262	0.0287	0.0273	0.5820	0.6247	0.6304	0.6355	0.0281	0.0268	0.5480	0.0267	0.6374	0.5674	0.6374

- ☐ No Comment
- ☐ Comment As Marked, Manufacturing May Proceed
- ☐ Major Comment As Marked, Manufacturing Shall Be On Hold For The Next Revision.
- ☐ Rejected, New Document With The Same Revision No. shall Be Issued
- ☐ For Information

Name:
Signature:
Date:
Req. No.:
Seq. No.:

Purchaser review & comments does not absolve the vendor of the responsibility for the correct design, manufacturing and operation of the equipment.

Eng. Phase	Purpose of Distribution (POD)	Purpose of Issue (POI)	Purchaser's Action
DE			

REV.	ISSUE DATE	DESCRIPTION	PREPARED BY	CHECKED BY	APPROVED BY	AUTHORIZED BY
02	08.04.2022	ISSUED FOR APPROVAL	A.R.	M.N.	H.I.	S.K.
01	11.01.2022	ISSUED FOR APPROVAL	A.R.	M.N.	H.I.	S.K.
00	07.12.2021	ISSUED FOR APPROVAL	A.R.	M.N.	H.I.	S.K.
A	24.11.2021	ISSUED FOR APPROVAL	A.R.	M.N.	H.I.	S.K.

OWNER : MC : EPCC CONTRACTOR :

PROJECT : HENGAM FERTILIZER PROJECT

VENDOR : KARAJET KARA SANAT TADBIR PAYA

TITLE : PROCESS FLOW DIAGRAM
For Vacuum Package (11-PU-105)

SCALE : NONE | OWNER PROJECT NO.: NA | VENDOR DWG. NO.: 270-PFD-00 | REV. 02 | SIZE A3
SHT. 1 OF 1 | PIDEC PROJECT NO. 1208 | PIDEC DWG. NO.: VD-1208-325A-PFD-039